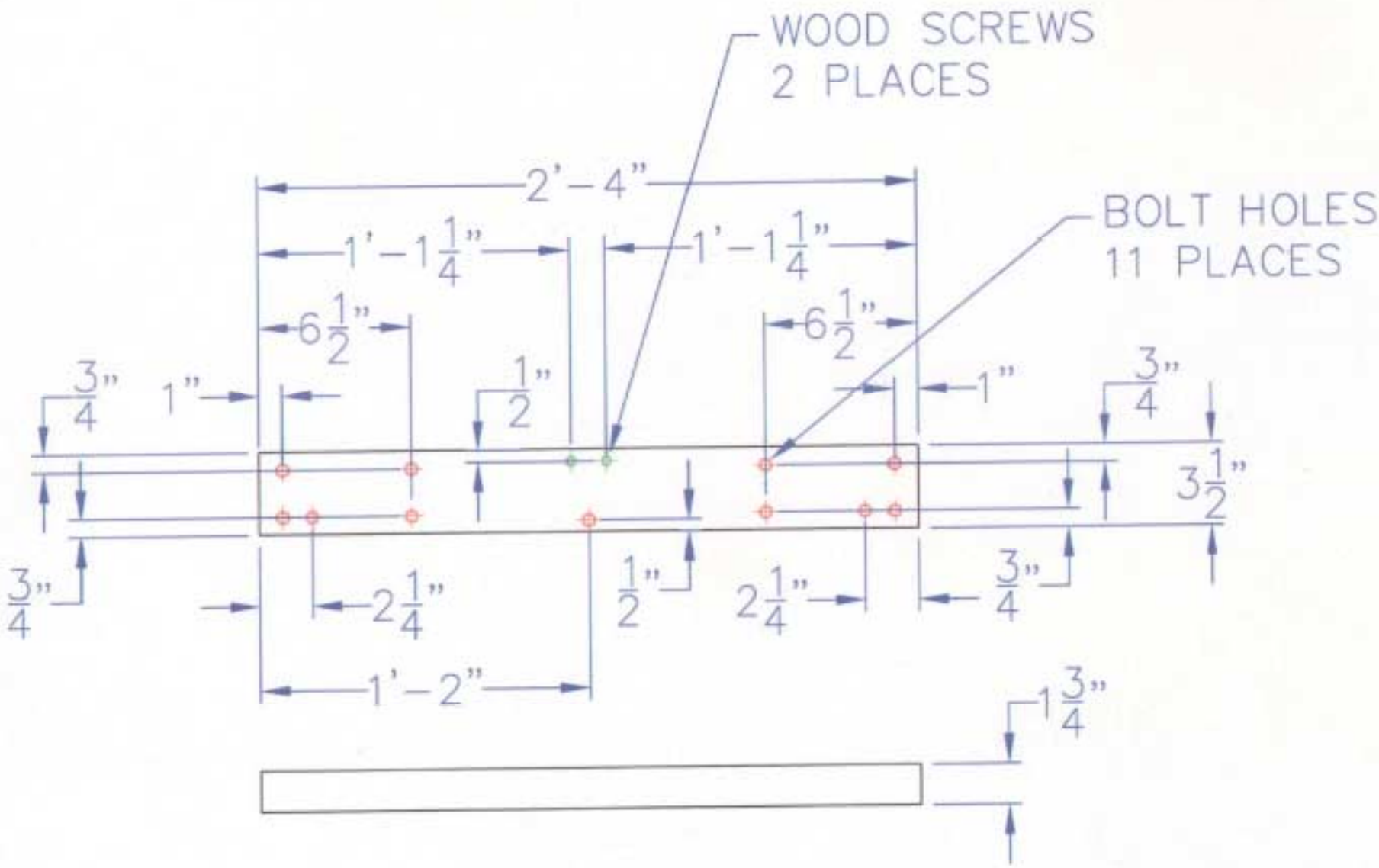

FRONT AXLE

⑧ (STANDARD 2"X4")